NMEA Conversion Gateway Install/User Manual

Issue 3.2

For all variants:
NGW-1-ISO
NGW-1-ISO-AIS
NGW-1-STNG
NGW-1-USB

Please also download our Actisense Toolkit software.

This powerful software allows you to configure and update your NGW-1 while it is connected to your PC. (NGW-1 firmware version 2.5 and above).
Provided free of charge, Actisense Toolkit interfaces with not only the NGW-1, but also allows configuring and updating of the Actisense EMU-1, PRO-BUF-1 & PRO-MUX-1.
With the addition on an Actisense NGT-1 connected between your NMEA2000 network and your PC you will not only have the facility to remotely configure an NGW-1, but also gain full visibility of any NMEA2000 certified devices connected to your network, making the NGT-1 an invaluable diagnostic tool.

Download ToolKit Here

Actisense®
Award Winning NMEA Specialists

Contents

Important Notices **3**
Trademarks and registered trademarks 3
Fair use statement 3
Technical accuracy 3
Product registration 3
Product Guarantee 3
Product installation and operation 3
Product disposal 3
About **4**
Firmware Updates **4**
Powering the NGW-1 ..... **4**
ISO Variants: 4
USB Variants: 4
Connecting to an NMEA 2000 Network **5**
NMEA 2000 Pin Out 5
Connecting to a SeaTalkNG Network **5**
Connecting to NMEA 0183 Devices **6**
Connecting to a PC/laptop **6**
LED Behaviour and Troubleshooting **7**
Technical Support and the Returns Procedure **7**
Changing Firmware **8**
NGW-1 firmware v2.500 and newer 8
NGW-1 firmware v2.420 and older 8
Connecting an NGW-1-ISO or NGW-1-STNG to a PC 8
Using ActiPatch to update firmware 9
Configuring Using Actisense Toolkit **9**
Tech Tips from our Support Team **11**
Using the NGW-1 with waypoints 11
Multiple sources of NMEA 0183 data 11
NGW-1 Prioritisation of NMEA 2000 Talkers 11
Difference between NGW-1 and NGT-1 12
Specifications **13**
NGW-1 Product Order Codes **14**

Important Notices

Trademarks and registered trademarks

Actisense® and the Actisense logo are registered trademarks of Active Research Limited. All other trademarks are the property of their respective owners.

The NMEA® name and NMEA logo are copyright held by the NMEA. All uses in this manual are by permission and no claim on the right to the NMEA name or logo are made in this manual.

Fair use statement

The contents of this manual may not be transferred or copied without the express written permission of Active Research Limited.
Copyright ©2017 Active Research Ltd. All rights reserved.

Technical accuracy

To the best of our knowledge the information contained in this document was correct at the time it was produced. Active Research Ltd cannot accept liability for any inaccuracies or omissions.

The products described in this manual and the specifications thereof may be changed without prior notice. Active Research Ltd cannot accept any liability for differences between the product and this document. To check for updated information and specifications please contact Active Research Limited.

Active Research Limited will not be liable for infringement of copyright, industrial property rights, or other rights of a third party caused by the use of information or drawings described in this manual.

Product registration

Please register your product via the online form on www.actisense.com.

Your product package includes a unit serial number. Your registration will assist Actisense Support to link your product to your details, simplifying any future assistance you may require.

Product Guarantee

This product comes with a three year 'return to base' guarantee. If you suspect that the unit is faulty please refer to the Troubleshooting Guide section of this document.

It is a requirement of the guarantee that all installations of electronic equipment follow the NMEA 0400 specification. Any connection to a battery or power supply must meet the mandatory essential safety requirements that may be imposed by local regulatory agencies.

Actisense products are intended for use in a marine environment, primarily for below deck use. If a product is to be used in a more severe environment, such use may be considered misuse under the Active Research Limited guarantee.

Product installation and operation

This product must be installed and operated in accordance with the instructions provided. Failure to do so could result in personal injury, damage to your boat and/or poor product performance.

Product disposal

Please dispose of this product in accordance with the WEEE Directive. The product should be taken to a registered establishment for the disposal of electronic equipment.

About

The Actisense NGW-1 NMEA 2000 Gateway is the easiest way to link between a boats old and new data networks. The NGW-1 can convert NMEA 0183 data into NMEA 2000 data and vice-versa.

The NGW-1 is available to purchase in a variety of options:
NGW-1-ISO is the standard option. With an opto-isolated input and ISO-Drive output for direct NMEA 0183 device bi-directional connection.

NGW-1-ISO-AIS is the NMEA 0183 AIS option that enables the conversion of NMEA 0183 AIS data to its equivalent in NMEA 2000. This provides an 'out of the box' solution for quick installation with no configuration required.

NGW-1-USB is the NMEA 0183 USB (1.1 and 2.0) interface for bi-directional connection to a PC for use with NMEA 0183 software.

Every option of the NGW-1 is available with the SeaTalkNG to NMEA 2000 adaptor Cable - STNG-A06045. The SeaTalkNG to NMEA 2000® adaptor cable (STNG-A06045) is not available as a standalone product and must be bought as part of a bundle.

Please go to the 'Downloads' page of the Actisense website to see the up to date list of conversions the various configurations can handle.

The Actisense NMEA Reader software utility allows the NGW-1 user to view and understand (in detail) the translated NMEA 0183 sentences output by an NGW-1 directly.

Firmware Updates

The NGW-1 units have built-in firmware which is held in 'flash' memory, allowing quick and easy upgrades using the latest NGW-1 ActiPatch.

Actisense recommends that the NGW-1 firmware is kept up to date. The firmware version currently installed on the NGW-1 can be checked on any NMEA 2000 MFD capable of displaying all devices that are active on the NMEA 2000 network. Simply check this number against the latest version number on in the downloads section of the Actisense website.

Powering the NGW-1

ISO Variants:
All ISO variants of the NGW-1 receive their power supply when connected to a correctly powered NMEA 2000 backbone. The backbone must also be correctly terminated to allow connected devices to communicate. Refer to the "Connecting to an NMEA 2000 Network" section for more information.

USB Variants:
All USB variants will be powered by the PC/laptop USB connection once the USB drivers have been successfully installed. Depending on the settings of the PC/laptop that the NGW-1 is connected to, the latest Actisense USB drivers will install automatically from Windows update. If this does not happen, the same USB driver files are available from the NGW-1 downloads web page.

Connecting to an NMEA 2000 Network

The illustration below provides an example of the minimum requirements for an NMEA 2000 network. If an NMEA 2000 network is not currently installed, Actisense has a variety of Starter Kits available.

The horizontal cable illustrating the backbone is not always needed in reality as a backbone can be formed by simply connecting T-pieces directly to each other. The cable connecting a device to a T-piece must not exceed 6 metres as defined in the NMEA 2000 specification:

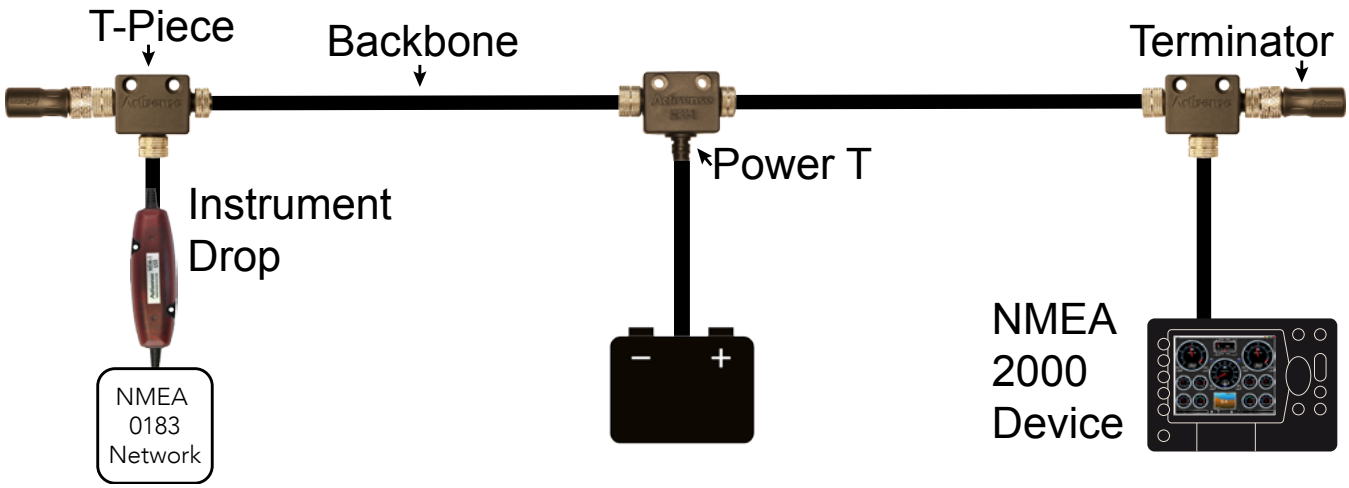

NMEA 2000 Pin Out
The diagram below illustrates the standard wiring colours used by all NMEA 2000 devices (like the NGW-1):

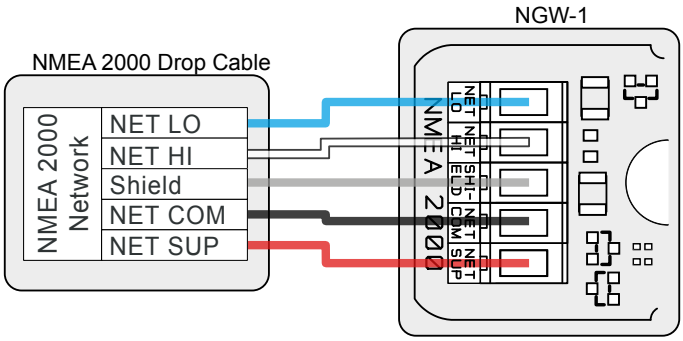

NMEA 2000	Wire Colour	PCB Label
Shield	Shield/Screen	SHIELD
Net Low	Blue	NET LO
Net High	White	NET HI
Net Common	Black	NET COM
Net Supply	Red	NET SUP

Connecting to a SeaTalkNG Network

Raymarine's SeaTalkNG network uses exactly the same data as a standard NMEA 2000 network. The only difference is the physical network connections. To connect any standard NMEA 2000 device (like the NGW-1) to an STNG network, simply use an NMEA 2000 to STNG adapter cable (product code: STNG-A06045) between the device and the STNG network.

Connecting to NMEA 0183 Devices

The diagram and table below illustrate how to connect the individual wires from any ISO variant NGW-1 to the Talker/Listener terminals of an NMEA 0183 device.

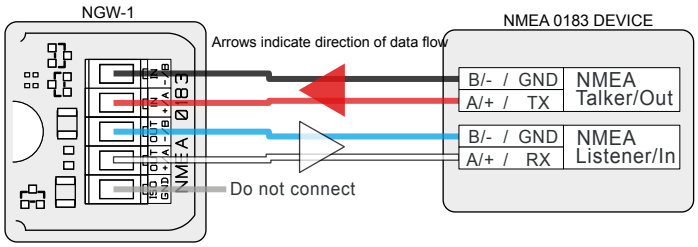

Label	Wire Colour	NMEA 0183 device
IN B / -	Black	Talker OUT B / - / GND
IN A / +	Red	Talker OUT A / + / Data
OUT B / -	Blue	Listener OUT B / - / GND
OUT A / +	White	Listener OUT A / + / Data
ISO GND	Shield / Screen	Not Connected

Connecting to a PC/laptop

The diagram and table below illustrate how to connect the individual wires from any ISO variant NGW-1 to an RS232 serial cable (such as the Actisense DB9F). If the PC/laptop does not have a serial port, a USB-to-Serial converter will also be needed (such as the Actisense USBKIT).

Label	Wire Colour	Computer / RS232
IN B / -	Black	GND (Pin 5)
IN A / +	Red	TX (Pin 3)
OUT B / -	Blue	GND (Pin 5)
OUT A / +	White	RX (Pin 2)
ISO GND	Shield / Screen	Not Connected

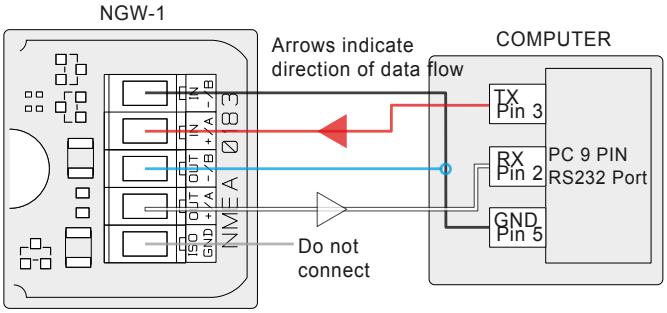

Alternatively, for total piece-of-mind the flexible Actisense USG-2 can connect an NGW-1-ISO to a computer using USB. It can also be used as an NMEA 0183 diagnostic tool with NMEA Reader.

LED Behaviour and Troubleshooting

There are 2 LEDs inside the NGW-1, one on the NMEA 0183 side, one on the NMEA 2000 side. On start up, these LEDs will flash alternately and very quickly for 2 seconds.

The primary function of the NGW-1 NMEA 0183 LED is to indicate reception of a valid NMEA 0183 sentence. The NMEA 2000 LEDs main function is to indicate reception of a PGN on the NGW-1 conversion list. It is normal for the NMEA 0183 LED to flash faster than the NMEA 2000 LED due to the smaller bandwidth available to NMEA 0183.

If the NGW-1 is not receiving any data on either side, both LEDs will flash together every 10 seconds. This could be a result of incorrect wiring, mismatched baud rates or a lack of data available to the NGW-1.

Consult the video in the Actisense Support Centre for regular LED behaviour and the table below for irregular LED behaviour:

Behaviour	Solution
USB only: The LEDs do not light	The USB driver has not been installed correctly.
The NMEA 2000 LED does not flash when the NMEA 2000 network is active	Check that the NGW-1 is connected to the NMEA 2000 network and that the NMEA 2000 network is operational. Confirm that the PGN messages are available on the network (using an Actisense NGT-1 or similar device) and that the required PGNs are supported on the latest NGW-1 Conversion List.
The NMEA 0183 LED does not flash when connected to an NMEA 0183 Talker	Check that the NGW-1 is connected correctly to the NMEA 0183 device and that the same Baud rate has been set on both devices.
Both LEDs flash together, once every 10 seconds	Indicates that the NGW-1 is powered but no data is received from either connection. If valid data should be present and converted by the NGW-1 on one or both inputs, refer to the two rows above.
The LEDs flash alternately very fast (4 times per second). This sequence repeats continuously	Indicates that the NGW-1 has lost its Firmware, please connect the unit to the latest NGW-1 Actipatch and re-install the Firmware.

Technical Support and the Returns Procedure

All installation instructions and any warnings contained in this manual must be followed before contacting Actisense technical support. If the troubleshooting guide did not help resolve the problem and an error persists, please contact Actisense technical support to help trace the issue before considering the return of the product. If Actisense support concludes that the NGW-1 unit should be returned to Actisense a Returns Number will be issued by the support engineer.

The Returns Number must be clearly visible on both the external packaging and any documentation returned with the product. Any returns sent without a Returns Number will incur a delay in being processed and a possible charge.

Changing Firmware

NGW-1 firmware v2.500 and newer

Switching between AIS and Standard configurations does not require the firmware to be updated, as Actisense Toolkit can help create the exact configuration by enabling or disabling conversions as required. Please refer to Page 9 for details of how to configure an NGW-1 using Actisense Toolkit.

If a new NGW-1 firmware has been released, download the ActiPatch that matches the hardware variant (ISO, USB, STNG) of your NGW-1 from the NGW-1 Download page. For example, if you have an **NGW-1-ISO**, both the "**NGW-1-ISO** (STD) vX.XXX ActiPatch Setup" (defaults to 'Standard conversions') and the "**NGW-1-ISO**-AIS vX.XXX ActiPatch Setup" (defaults to 'AIS/Full conversions') can be used to update.

Once the update is complete, if the NGW-1 had previously been configured using Actisense Toolkit it will continue to use that configuration, if not, Actisense Toolkit can be used to create a configuration that exactly matches the conversion requirements.

NGW-1 firmware v2.420 and older

Both the 'Standard conversions' firmware and 'AIS conversions' firmware can be installed into any hardware variant (ISO, USB, STNG) using the corresponding ActiPatch. The firmware has all possible conversions enabled by default, ready to go and NMEA Reader can be used to disable any of those conversions that are not required. For full instructions on how to use NMEA Reader, please refer to the NMEA Reader & EBL Reader User Manual.

If a new NGW-1 firmware has been released or there is a requirement to change between the 'Standard conversions' and 'AIS conversions' firmware, download the required ActiPatch that matches the NGW-1 hardware variant (ISO, USB, STNG) from the NGW-1 Download page.

For example, if you have an **NGW-1-ISO** running the 'Standard conversions' firmware and wish to change to the 'AIS conversions' firmware, download the "**NGW-1-ISO**-AIS vX.XXX ActiPatch Setup" and use it to update the firmware. To return to the 'Standard conversions' firmware, download and use the "**NGW-1-ISO** (STD) vX.XXX ActiPatch Setup".

Connecting an NGW-1-ISO or NGW-1-STNG to a PC

In order to update firmware or configure the conversions, these are the connection options:

1. The Actisense USBKIT is a quick and low-cost way to connect the NGW-1 to a PC. It can be connected to the NGW-1's ISO / NMEA cable, or directly to the NGW-1 terminal block inside the case (as long as standard antistatic precautions are observed).

2. If a standard "USB to Serial" adapter cable is already available, this can be plugged in to a 'D-type' 9-pin connector (such as the Actisense DB9-F) which is wired to the NGW-1's ISO / NMEA 0183 cable or directly to the NGW-1 terminal block inside the case instead if that is more convenient (as long as antistatic precautions are observed).
   Please refer to section "Connecting to a PC/laptop" on page 6 for more details.

3. The most flexible option is the Actisense USG-2 that includes a 4-pin terminal block that the NGW-1's ISO / NMEA 0183 cable can connect directly to.

   The USG-2 offers 1500 volts of isolation on both its input and output, which allows it to be used on any NMEA 0183 device whilst keeping the PC safe from ground loops and ground potential differences. This makes it a true NMEA 0183 diagnostic tool for installers when used with the freely available Actisense NMEA Reader software.

Please note that **NGW-1-ISO** variants are powered using the NMEA 2000/SeaTalkNG cable, therefore backbone power must be available on the "CAN C" and "CAN S" pins on the NMEA 2000/SeaTalkNG connector before the NGW-1 can operate. **NGW-1-USB** variants are powered once the latest USB drivers have been successfully downloaded and installed on the connected PC.

Using ActiPatch to update firmware
With the NGW-1 connected to your PC, select the corresponding COM port for your NGW-1 in the “Comms” drop down menu in ActiPatch. Please note that you do not need to select a baud rate as ActiPatch will automatically try many different baud rates. Once bi-directional communication between ActiPatch and the NGW-1 has been achieved, the ‘Program’ button will go green.

Click on the ‘Program’ button to start the update process – the progress bar will indicate the firmware update progress, starting with a red bar and then a green bar. When the installation has completed successfully, the ‘Patch ID’ box and ‘Device ID’ box will contain identical numbers.

Configuring Using Actisense Toolkit

NGW-1-USB variants can be connected directly to a PC using its USB cable and NGW-1-ISO variants can be connected using one of the options detailed in “Connecting an NGW-1-ISO or NGW-1-STNG to a PC” on page 8. Alternatively, if an Actisense NGT-1-USB or NGT-1-ISO is available, the NGW-1 can be connected to remotely via the NGT-1, greatly increasing the simplicity of the configuration operation.

Run the Actisense Toolkit program, either select the COM Port of the NGW-1 device and its matching baud rate (typically 4800 or 38400 baud) or select the COM port of the NGT-1 device and its matching baud rate (typically 115200 or 230400 baud). Select the NGW-1 device in the “Serial / CAN Device List” and choose the “Load from Device” option under “Device Configuration” section or on the right-click context sensitive menu to load the current NGW-1 configuration and open a new configuration document in Toolkit.

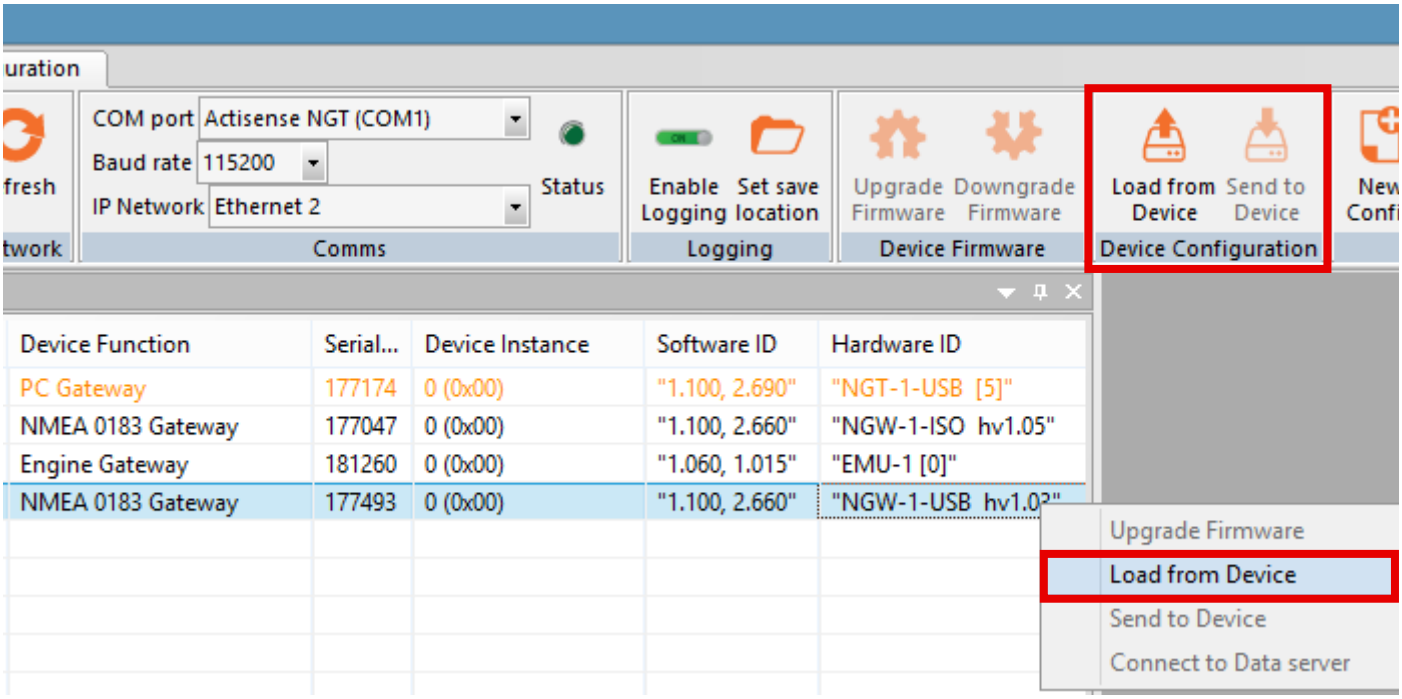

The NGW-1 configuration document shows every aspect of the configuration such as the NMEA 0183 baud rate, whether the ARL P-Codes are enable/disable and two tabs that detail every possible NMEA 0183 Sentence and NMEA 2000 PGN that can be configured for receive (Rx) and transmit (Tx), plus their “Tx Period” in milliseconds.

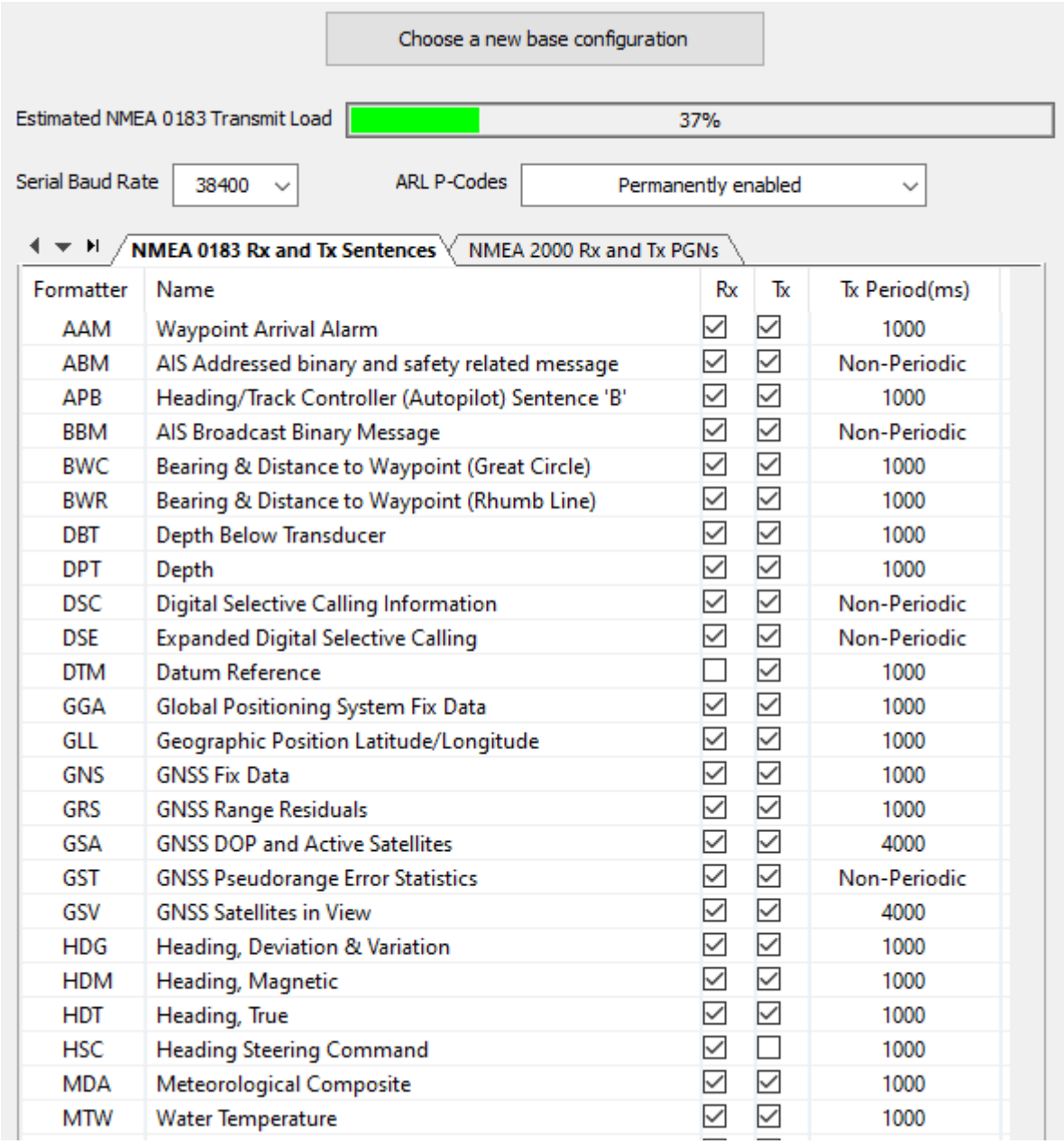

Formatter	Name	Rx	Tx	Tx Period(ms)
AAM	Waypoint Arrival Alarm	☑	☑	1000
ABM	AIS Addressed binary and safety related message	☑	☑	Non-Periodic
APB	Heading/Track Controller (Autopilot) Sentence 'B'	☑	☑	1000
BBM	AIS Broadcast Binary Message	☑	☑	Non-Periodic
BWC	Bearing & Distance to Waypoint (Great Circle)	☑	☑	1000
BWR	Bearing & Distance to Waypoint (Rhumb Line)	☑	☑	1000
DBT	Depth Below Transducer	☑	☑	1000
DPT	Depth	☑	☑	1000
DSC	Digital Selective Calling Information	☑	☑	Non-Periodic
DSE	Expanded Digital Selective Calling	☑	☑	Non-Periodic
DTM	Datum Reference	☐	☑	1000
GGA	Global Positioning System Fix Data	☑	☑	1000
GLL	Geographic Position Latitude/Longitude	☑	☑	1000
GNS	GNSS Fix Data	☑	☑	1000
GRS	GNSS Range Residuals	☑	☑	1000
GSA	GNSS DOP and Active Satellites	☑	☑	4000
GST	GNSS Pseudorange Error Statistics	☑	☑	Non-Periodic
GSV	GNSS Satellites in View	☑	☑	4000
HDG	Heading, Deviation & Variation	☑	☑	1000
HDM	Heading, Magnetic	☑	☑	1000
HDT	Heading, True	☑	☑	1000
HSC	Heading Steering Command	☑	☐	1000
MDA	Meteorological Composite	☑	☑	1000
MTW	Water Temperature	☑	☑	1000

Once the various configuration options have been configured as required, the “Estimated NMEA 0183 Transmit Load” bar will indicate whether the configuration will work as expected (when the load is 100% or below) or whether the transmit rates in reality may be lower than requested (when the load is above 100%) due to output overload.

To send the configuration to an NGW-1, select the “Send to Device” option in “Device Configuration” or right-click menu option and choose the NGW-1 device to send it to.

Full details of this configuration process can be found in the “NGW-1 Help” document available from the Actisense Toolkit “User Manual” Help menu.

Tech Tips from the Actisense Support Team

Using the NGW-1 with waypoints

If you want to use the NGW-1 with NMEA 0183 waypoint names, they have to be purely numeric – e.g. a valid waypoint name is “73”, an invalid name is “waypoint 73” in order for the NGW-1 to correctly convert it to NMEA 2000. This is because NMEA 2000 waypoint names can only be numeric (at their lowest level). Converting NMEA 2000 waypoint names to NMEA 0183 is simple as they will automatically use the numeric value defined in NMEA 2000.

Multiple sources of NMEA 0183 data

Unfortunately it is not possible in any NMEA 0183 networking situation to connect the output of more than one Talker device to the input of one or more Listeners. To convert data from more than one NMEA 0183 Talker to NMEA 2000 you have two choices:

1. Use a dedicated NGW-1 for each NMEA 0183 Talker device. This solution allows bi-directional sharing of NMEA 0183 data between the NMEA 0183 device and the NMEA 2000 network.

2. Use an NMEA 0183 multiplexer, such as the Actisense NDC-5 to combine the output of the two Talkers. Then use an NGW-1 to convert the output from the NDC-5 to NMEA 2000. Only if the multiplexer has already been purchased is this a good solution as it is very difficult to share data bi-directionally.

We recommend using a dedicated NGW-1 for each device because multiplexing can become complicated when considering bi-directional data and multiple data sources. In addition, the cost of an NDC-5 and an NGW-1 is approximately the same as the cost of **four** NGW-1’s.

NGW-1 Prioritisation of NMEA 2000 Talkers

When there is more than one device of the same type (like a GPS) on the NMEA 2000 network, the NGW-1 will use the data from the highest priority (lowest source address) device on the bus. If the device required to be the primary data source for the NGW-1 claims a lower source address than other devices of the same type, the NGW-1 will convert the data from the preferred device. If however, a secondary device claims a lower source address than the primary data source, there is no direct way to change this.

One possible resolution however is to try changing the “Device Instance” of the secondary device to instance 1, leaving the primary data source as instance 0.

Not all NMEA 2000 device manufacturers support the standard method for changing the Device Instance, however for those that do, NMEA Reader software and an Actisense NGT-1 (we recommend the USB variant for simple PC connections) can be used to quickly change the Device Instance.

The NGT-1 is compatible with a wide range of software. To view a list of software that can be used with the NGT-1, please visit our NGT-1 compatibility page. If using the ISO variant of the NGT-1, please contact the software developer to ensure that they support this option.

Difference between NGW-1 and NGT-1

1. **NGT-1:** NMEA 2000 PC Interface – allows NMEA 2000 / SeaTalkNG messages to be read by an application and also allows that application to send NMEA 2000 messages back to the network. The NGT-1 does not understand NMEA 0183.

   The most common variant is the **NGT-1-USB** as that is the easiest method of getting NMEA 2000 data to a PC. The **NGT-1-ISO** is available for customers who do not want USB and the drivers it requires.

   An NGT-1 working with NMEA Reader is a very powerful NMEA 2000 network diagnostic tool.

2. **NGW-1:** NMEA 2000 to NMEA 0183 Gateway – converts between the old and the new NMEA protocols bi-directionally. It cannot be used to transfer NMEA 2000 messages to the PC; the serial port only understands NMEA 0183.

   The most common variant is the **NGW-1-ISO** for direct connection to an NMEA 0183 Talker / Listener device. The **NGW-1-USB** is available for customers who want an easy method of getting NMEA 0183 data to a PC and an application running on it.

   An NGW-1 makes it possible for new and old NMEA devices to share data, bi-directionally.

It is not possible to change an NGW-1 to an NGT-1 or vice versa. Fundamentally, the product name shown on the case determines the expected device behaviour and if these two conflict with each other, the resultant confusion can lead to the device being incorrectly considered faulty.

Power Supply (ISO, ISO-AIS & STNG Variants)	
Supply Voltage (NMEA 2000 Port)	9.5 to 35V DC
Supply Current (NMEA 2000 Port)	35mA @ 12V DC, Max 50mA
Load Equivalent Number (LEN)	1
Power Supply (USB Variants)	
Supply Voltage (NMEA 2000 Port)	9 to 29V DC
Supply Current (USB Host Port)	85mA @ 5V DC
Supply Current (NMEA 2000 Port)	15mA @ 12V DC, Max 50mA
Load Equivalent Number (LEN)	1
NMEA 2000 Port (All Variants)	
Compatibility	Fully NMEA 2000 certified
Galvanic Isolation	Refer to 'ISO port' or 'USB port'
Speed / Baud Rate	250kbps
Connectivity	M12 Male (A polarised) connector moulded on cable
Cable Length NMEA 2000	1.5m
Cable Length STNG Adapter	0.4m (1.9m with NMEA 2000 cable connected)
ISO Port (NMEA 0183 port - ISO, ISO-AIS & STNG Variants)	
Compatibility	Full NMEA 0183, RS232 & RS422 compatible. RS485 Listener compatible
Galvanic Isolation	2500V input to ground, 1500V output to ground using ISO-Drive
Speed/Baud Rate	4800 to 115200 Baud
Output Voltage Drive	>= 2.1V (differential) into 100Ω
Output Current Drive	20mA max.
Output Protection	Short circuit and ESD
Input Voltage Tolerance	-15V to +15V continuous -35V to +35V short term (< 1 second)
Input Protection	Current limited and overdrive protection to 40VDC
Connectivity	5mm stripped and tinned wire
Cable Length	1.5m
USB Port (USB Variant)	
Compatibility	USB 1.1, 2.0 and 3.0
Galvanic Isolation	2500V input to ground
Speed / Baud Rate	4800 to 230400 Baud
Connectivity	Male type A plug moulded onto cable
Cable Length	1.5m
Drivers (Latest OS)	MAC OS X, Windows XP, 7, 8 & 10 supplied via the Product Downloads web page
Drivers (Legacy OS)	Contact Actisense for full details of the legacy OS versions supported: support@actisense.com
Mechanical	
Housing Material Lid	Polycarbonate
Housing Material Base	Flame retardent ABS
Weight NGW-1-ISO & ISO-AIS	220g
Weight NGW-1-USB	210g
Weight NGW-1-STNG	260g
Approvals and Certifications	
Fully NMEA 2000 Certified	
Meets all IEC 61162-1 & 61162-2 requirements	
Meets all IEC 61162-3 requirements	
EMC	IEC 60945 (sections 9, 10 & 11.2)
Environmental Protection	IP42
Operating Temperature	-20°C to +55°C
Storage Temperature	-30°C to +70°C
Recommended Humidity	0 - 93% RH
Guarantee	3 years

NGW-1 Product Order Codes

Product Code	Product Description
NGW-1-ISO	NMEA 0183 to NMEA 2000 Gateway, standard configuration
NGW-1-ISO-AIS	NMEA 0183 to NMEA 2000 Gateway, pre-configured with AIS conversions
NGW-1-STNG	NMEA 0183 to SeaTalk NG Gateway
NGW-1-USB	NMEA 0183 to NMEA 2000 Gateway with USB, standard configuration
STNG-A06045	SeaTalkNG to NMEA 2000 adaptor cable (drop). Only for purchase with Actisense NMEA 2000 devices

Actisense®
Award Winning NMEA Specialists

Active Research Ltd.
21 Harwell Road
Poole
BH17 0GE
Dorset, UK
tel: (+44) 01202 746682
email: support@actisense.com
web: actisense.com